VERMEIREN

EZ1

INSTRUCTION MANUAL

CE

EN **Instructions to the specialist dealer**

This instruction manual is part and parcel of the product and must accompany every product sold.

Version: D, December 2012

All rights reserved, including translation.
No part of this manual may be reproduced in any form what so ever (print, photocopy, microfilm or any other process) without written permission of the publisher, or processed, duplicated or distributed by using electronic systems.

© N.V. Vermeiren N.V. 2012

Contents

Preface **2**
1 Productdescription **3**
1.1 Intended Use 3
1.2 Technical specifications 4
1.3 Drawing 5
1.4 Accessories 5
1.5 Explanation of symbols 5
1.6 Safety rules 6
2 Use **6**
2.1 Carrying the wheelchair 7
2.2 Mounting the rear wheels 7
2.3 Mounting or removing of the footrests 7
2.4 Operating the brakes 7
2.5 Mounting or removing of armrests 8
2.6 Mounting or removing of seat cushion 8
2.7 Mounting or removing of backrest 8
2.8 Mounting or removing of headrest 9
2.9 Adjusting the pushing handgrips 9
2.10 Backrest adjusting / Seat inclination 10
2.11 Transfer in and out the wheelchair 11
2.12 Correct position in the wheelchair 11
2.13 Riding the wheelchair 11
2.14 Riding the wheelchair by an attendant 11
2.15 Moving on slopes 11
2.16 Negotiating steps or curbs 12
2.17 Taking off the wheels 13
2.18 Transport in the car 13
3 Installation and adjustment **14**
3.1 Tools 14
3.2 Manner of delivery 14
3.3 Mounting the frame 15
3.4 Adjusting the seat height 15
3.5 Adjusting the seat depth 16
3.6 Adjusting the anti-tipping 17
3.7 Adjust the brakes 17
3.8 Adjusting of the footrests 18
3.9 Adjusting of the armpads 19
3.10 Adjusting of the headrest 20
4 Maintenance **20**

Preface

First of all we want to thank you for putting your trust in us by selecting one of our wheelchairs.

The Vermeiren wheelchairs are the result of many years of research and experience. During the development, special attention was given to the ease of use and the serviceability of the wheelchair.

The expected lifetime of your wheelchair is strongly influenced by the care and maintenance of the wheelchair.

This manual will help you get acquainted with the operation of your wheelchair.

Following the user instructions and the maintenance instructions are an essential part of the warranty.

This manual reflects the latest product developments. Vermeiren has the right to introduce changes without the obligation to adapt or replace previously delivered models.

For any further questions, please consult your specialist dealer.

1 Productdescription

1.1 Intended Use

The wheelchair is intended for people with walking difficulties or no walking abilities.

The wheelchair is designed to transport 1 person.

The wheelchair is suited for indoor and limited outdoor use.

The user can propel the wheelchair by himself or have the wheelchair pushed by an attendant.

The different types of fittings and accessories, and the modular construction allow full use by persons disabled by:

- paralysis
- loss of limbs (leg amputation)
- limb defects or deformations
- stiff or damaged joints
- heart insuffiencies and poor blood circulation
- balance disturbances
- cachexia (decrease in muscle)
- and also for aged persons.

When providing for individual requirements:

- body size and weight (max. 150 kg)
- physical and psychological condition
- residential circumstances
- environment

should be taken into consideration.

Your wheelchair should only be used on surfaces where all four wheels are touching the ground and where there is sufficient contact to propel the wheels equally.

You should practice for use on uneven surfaces (cobblestones, etc.), slopes, curves and to get past obstacles (curbs, etc.).

The wheelchair should not be used as a ladder, nor is it a transport for heavy or hot objects.

When used on mats, carpeted floors or loose floor coverings, the floor covering can get damaged.

Use only Vermeiren approved accessories.

The manufacturer is not liable for damage caused by the lack of or improper service or as a result of not following instructions from this manual.

Compliance with the user and maintenance instructions are an essential part of the guarantee conditions.

Visually impaired people can contact the dealer for the instructions for use.

1.2 Technical specifications

Technical terms below are valid for the wheelchair in standard settings and for 22" rear wheels. If other footrests / armrests or other accessories are used, the tabulated values will change.

Make	**Vermeiren**						
Address	**Vermeirenplein 1/15, B-2920 Kalmthout**						
Type	**Multifunctional manual wheelchair**						
Model	**EZ1**						
Maximum occupant mass	**150 kg**						
Description	**Dimensions**						
Effective seat width	390 mm	420 mm	450 mm	480 mm	510 mm	540 mm	570 mm
Overall width (depends on the seat width)	600 mm	630 mm	660 mm	690 mm	720 mm	750 mm	780 mm
Backrest height	500 mm 600 mm	600 mm	500 mm 600 mm	600 mm	500 mm 600 mm	600 mm	

Description	**Dimensions Min.**	**Dimensions Max.**
Overall length with footrest	1116 mm	1122 mm
Folded length	790 mm	
Folded width	700 mm	
Folded height	980 mm	
Total mass	± 43,45 kg	
Mass of heaviest part	23,80 kg	
Masses of parts that can be dismantled or removed	**Footrests:** 6,20 kg ; **Armrests:** 3,00 kg; **Rear wheels:** 4,15 kg; **Seat cushion:** 1,5 kg; **Headrest:** 1,35 kg	
Static stability downhill	10° (in standard configuration)	
Static stability uphill	10° (in standard configuration)	
Static stability sideways	10° (in standard configuration)	
Obstacle climbing	60 mm	
Seat plane angle	-5°	+15°
Effective seat depth	430 mm	520 mm
Seat surface height at front edge (with cushion)	490 mm	620 mm
Seat cushion	80 mm	
Backrest angle	0°	50°
Distance between footplate and seat	440 mm	580 mm
Angle between seat and footplate	-3°	10°
Distance between armpad and seat	190 mm	290 mm
Front location of armrest structure	380 mm	430 mm
Handrim diameter	495 mm	
Horizontal location of axle (deflection)	140 mm	170 mm
Minimum turning radius	1133 mm	
Diameter PU Rear wheels	12,5" (T30)	22" / 24"
Tyre pressure, rear (driving) wheels (for air tyres)	Not applicable	
Diameter PU steering wheels	200 x 50 (8")	
Tyre pressure, steering wheels (for air tyres)	Not applicable	
Frame color / upholstery	C21 Dark red metallic / Soft Grey	
Storage and use temperature	+ 5 ℃	+ 41 ℃
Storage and use humidity	30%	70%
We reserve the right to introduce technical changes. Measurement tolerance ± 15 mm / 1,5 kg / °		

Table 1: Technical specifications EZ1

The wheelchair complies to the requirements set up in:

ISO 7176-8: Requirements and test methods for static, impact and fatigue strengths.

EN 1021-1: Assessment of the ignitability of upholstered furniture - Ignition source smouldering cigarette

1.3 Drawing

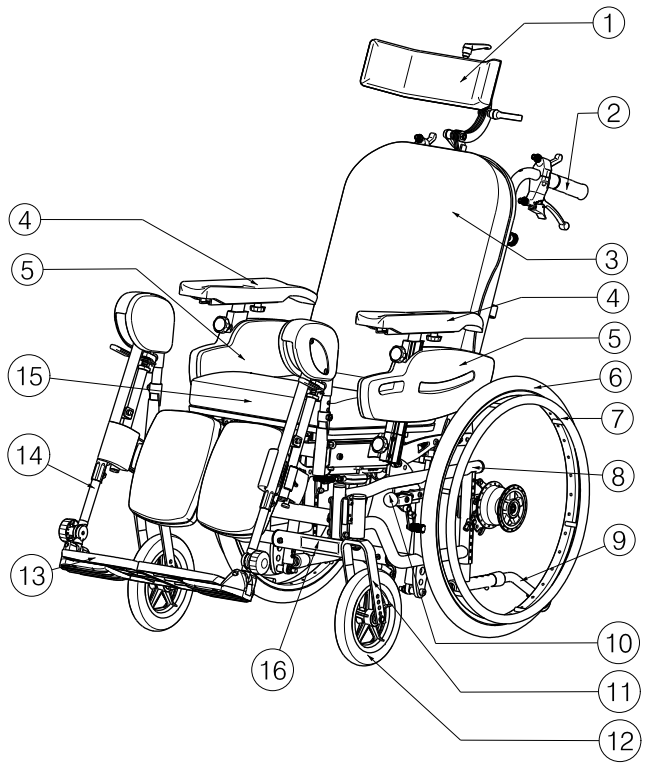

1. Headrest
2. Handgrips
3. Backrest
4. Armpads
5. Armrests
6. Driving wheels (Rear wheels)
7. Handrims
8. Main frame
9. Anti tipping
10. Brakes
11. Front fork
12. Steering wheels (Front wheels)
13. Footplates
14. Footrests
15. Seat cushion
16. Identification plate

1.4 Accessories

The following accessories are available for the EZ1:

- Anterior pelvic belt (B20, B58)
- Side supports/pellots (L04)
- Polycarbonate therapy table (B115)
- Wooden table (B12)
- Drum brakes (B74)
- Horizontal wedge (B22)

Contact your specialist dealer about other accessories. He will gladly advise you.

1.5 Explanation of symbols

Maximum mass

Indoor and outdoor use

Maximum Safe Slope

CE conformity

Not intended to be used as a seat in a Motor vehicle

Type designation

1.6 Safety rules

- ⚠ To prevent injury and/or damage to your wheelchair, make sure that no objects and/or body parts are caught in the spokes of the driving wheels.
- ⚠ The parking brakes should be applied before getting into and out of the wheelchair.
- ⚠ The parking brakes should be applied when adjusting/mounting the backrest, armrests, ...
- ⚠ When getting into and out of the wheelchair, do not stand on the footplates. These should be folded up beforehand, or the footrests should be swung completely outwards out of the way.
- ⚠ Investigate the effects of shifting the centre of gravity on the behavior of the wheelchair, for example on up or down gradients, on laterally sloping ground, or when overcoming obstacles. Obtain support from an attendant.
- ⚠ If you want to pick up something (lying in front of, on the side, or to the rear of the wheelchair), you should not lean too far out to avoid tipping over.
- ⚠ When moving through doors, arches, etc. ensure that there is enough room at the sides so that you do not get your hands or arms caught or crushed and that there is no damage to the wheelchair.
- ⚠ Only use your wheelchair according to regulations. For example, avoid uncontrolled rolling against obstacles (steps, curbs, doorframes, etc) or dropping down from ledges. The manufacturer cannot assume liability for damage caused by overloading, collision or other improper use.
- ⚠ Stairs may only be negotiated when aided by another person. If furnishings like drive-on, ramps or lifts are available, use them.
- ⚠ When moving on the public highway, you are subject to the rules of the road.
- ⚠ When driving your wheelchair, you should not be under the influence of alcohol or medicine as in the case of driving other vehicles. This also applies to indoor driving.
- ⚠ When travelling outdoors, adapt your driving to weather and traffic conditions.
- ⚠ When transporting the wheelchair, never pick it up by grasping movable parts (armrests, footrests, etc.)
- ⚠ To be better visible when driving in the dark, wear the brightest possible clothing or clothes with reflectors, and check that the reflectors mounted on the sides and rear of the wheelchair are clearly visible.
- ⚠ Never exceed the maximum load of 150 kg.
- ⚠ Use gloves for driving outside, these will increase the grip on the handrim and protect fingers from dirt and heat.
- ⚠ To avoid hand injuries when driving the wheelchair, do not place your fingers/hands between the driving wheel and wheel lock.
- ⚠ Make sure that **no** objects or body parts are in the adjustment range while performing any adjustment functions. – Danger of crushing
- ⚠ Make sure the quick-release wheels are fully engaged to the axle.
- ⚠ Be careful with open flames (upholstery is flame retardant, filler material is not flame retardant).

2 Use

This chapter describes the everyday use. **These instructions are for the user and the specialist dealer.**

The wheelchair is delivered fully assembled by your specialist dealer. The instructions intended for the specialist dealer on how to set up the wheelchair are given in § 3.

2.1 Carrying the wheelchair

The best way to carry the wheelchair is to make use of the wheels and roll the wheelchair.

If this is not possible (e.g. when the rear wheels are taken off for transportation in a car), firmly grasp the frame on the front and the handgrips. Do not use the foot- or armrests or the wheels to grasp the wheelchair.

2.2 Mounting the rear wheels

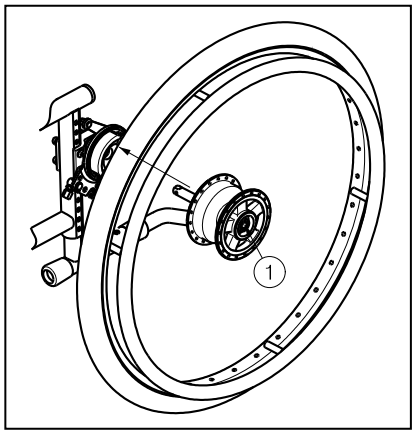

1. Take the rear wheel and push on button ①.
2. Keep the button pushed in and mount the rear wheels axle till it stops.
3. Release the button ①.
4. Check that the wheel is secured.

2.3 Mounting or removing of the footrests

⚠ **CAUTION: Risk of injury – Check that the footrests are firmly mounted before using your wheelchair.**

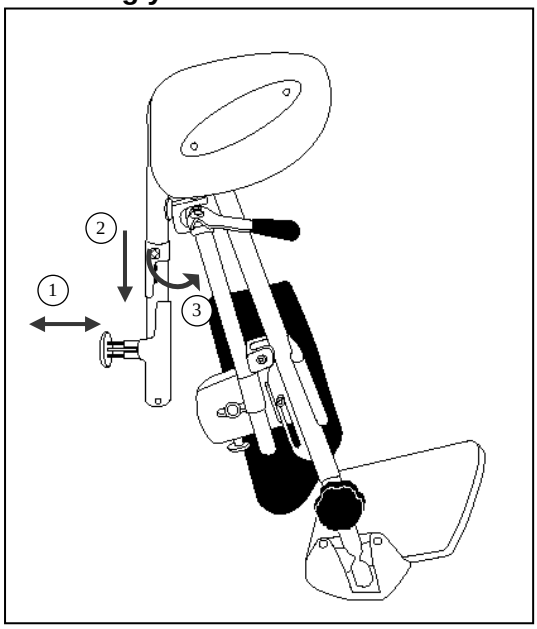

The mounting of the footrests is done as follows:

1. Pull out the pin ① of the footrests holder.
2. Place the footrests from the top into the footrests holder. Leave the pin ① of the footrests holder loose. To turn the footrest to the outside, pull out the pin ① and raise the footrest a little bit up (25 mm).
3. Turn the footrest to the outside.
4. Fold the footplate downwards.

To take off the footrests:

1. Fold the footplate upwards.
2. Pull out the pin ① of the footrests holder.
3. Lift the footrest out the footrests holder.
4. Leave the pin ① of the footrests holder loose.

2.4 Operating the brakes

⚠ **WARNING: The brakes are not used to slow down the wheelchair during movements – Use the brake only to prevent the wheelchair from unintended movements.**

⚠ **WARNING: Good operation of the brakes is influenced by wear and contamination of the tires (water, oil, mud, …) – Check the condition of the tires before each use.**

⚠ **WARNING: The brakes are adjustable and can wear – Check the operation of the brakes before each use.**

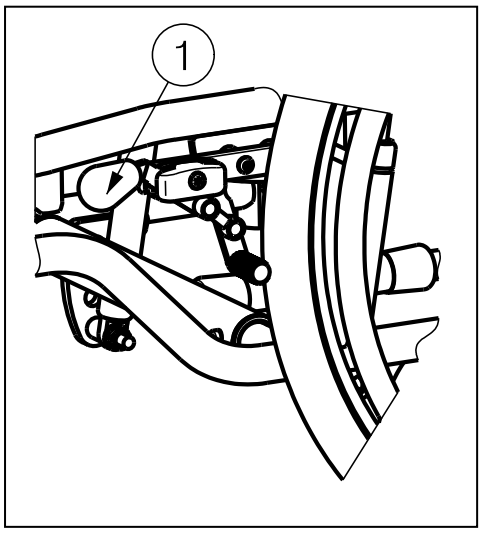

To apply the brakes:

1. Push the brake handles ① forward till you feel a distinctive click.

⚠ **CAUTION: Risk of unintended movement – Make sure the wheelchair is on a flat horizontal surface before releasing the brakes. Never release both brakes simultaneously.**

To release the brakes:

1. Release one brake by pulling the lever ① backwards.
2. Hold the handrim of the released wheel with your hand.
3. Release the second brake by pulling the lever ① backwards.

2.5 Mounting or removing of armrests

⚠ **CAUTION: Risk of clamping – Keep fingers, buckles and clothes away from the bottom side of the armrest.**

⚠ **CAUTION: Risk of injury – Check that the armrests are firmly mounted before using your wheelchair.**

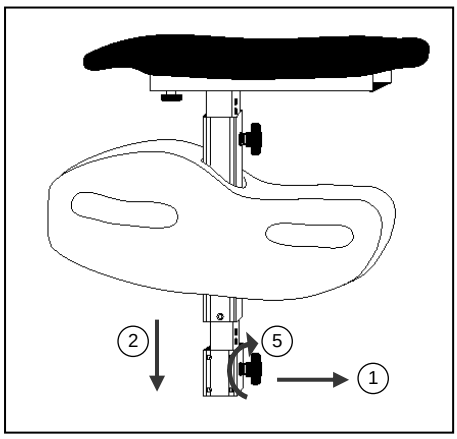

The armrests of the wheelchair can be mounted by following instructions.

1. Pull the star button ① out.
2. Mount the armrest from the top in the appropriate tube hood ②.
3. Release the star button ①.
4. Make sure the armrest is firmly secured.
5. Turn the star button ① clockwise until hand tight.

To remove the armrest:

1. Turn the star button ① anticlockwise.
2. Pull the star button ① out.
3. Remove the armrest out the tube hood.

To mount and remove the armpads you can use above instructions “mounting or removing of armrests".

2.6 Mounting or removing of seat cushion

Place/Remove the seat cushion on/from the seat plate with the Velcro strips.

2.7 Mounting or removing of backrest

⚠ **CAUTION: Risk of injury – Check that the backrest is firmly mounted into the four brackets before using your wheelchair.**

⚠ **CAUTION: Risk of clamping, damage – Check that the cables of the handles are not pinched between the backrest frame tubes.**

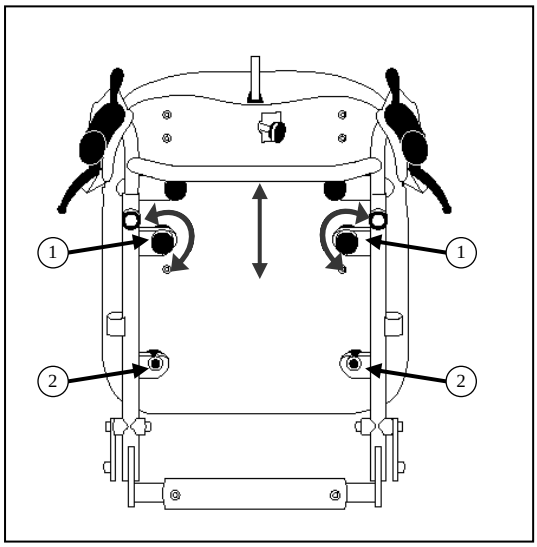

The backrest of the wheelchair can be mounted by following instructions.

1. Mount the backrest into the four brackets ① + ②.
2. Turn on the upper star buttons to lock the star buttons by hand.
3. Check that the back is firmly fixated.

To remove the backrest of the wheelchair:

1. Loosen the upper star buttons.
2. Pull the backrest upwards out the four brackets ① + ②.

2.8 Mounting or removing of headrest

⚠ **CAUTION: Risk of injury – Check that the headrest is firmly fixated before using your wheelchair.**

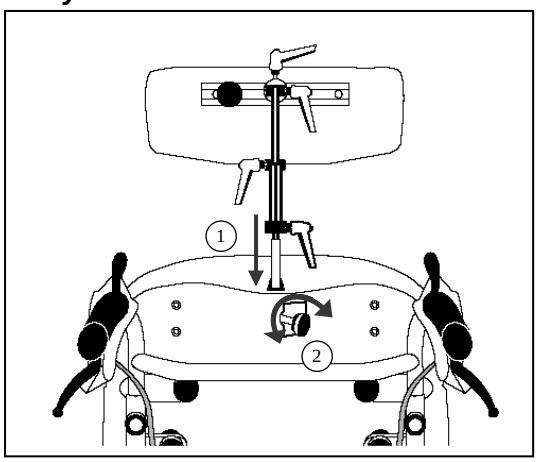

The headrest of the wheelchair can be mounted by following instructions.

1. Mount the headrest into the tube ①.
2. Turn on the star button ② to lock the star button by hand.
3. Check that the headrest is firmly fixated.

To remove the headrest of the wheelchair:

1. Loosen the star button ②.
2. Pull the headrest upwards out the tube ①.

2.9 Adjusting the pushing handgrips

⚠ **CAUTION: Risk of injury – Check that the pushing handgrips are firmly fixated before using your wheelchair.**

⚠ **CAUTION: Risk of tipping over the wheelchair – Respect the maximum height adjustment otherwise the stability of the wheelchair is at a risk. Use only the last limitation of the pushing handgrips tubes.**

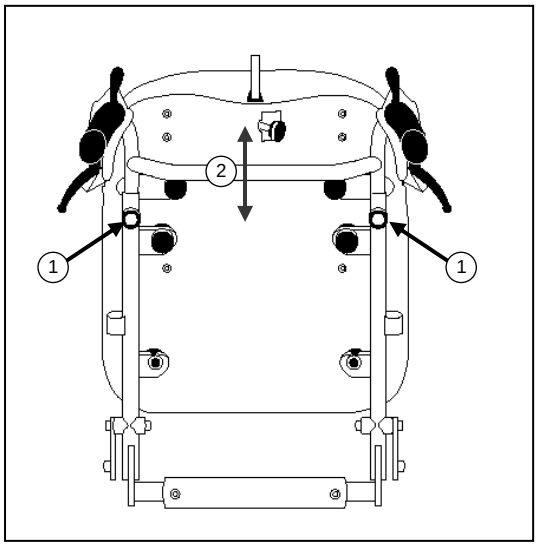

The pushing handgrips can be adjusted in height according to the size of the attendant person.
The handgrips can be adjusted by following instructions.

1. Loosen the star buttons ① on each side.
2. Place the pushing handgrips in the desired height for the attendant person.
3. Retighten the star buttons ① on each side.
4. Check that the handgrips are firmly fixated.

2.10 Backrest adjusting / Seat inclination

⚠ **WARNING: Risk of tipping over – Be aware that the stability decrease when the backrest is adjusted backwards.**

⚠ **WARNING: Risk of injury – Apply the parking brakes before adjusting the backrest and seat inclination.**

The seat and the backrest can only be adjusted simultaneously or independently from one another in their angle by an attendant. Be sure that the patient sits in the chair when the attendant shall perform the back adjusting, seat inclination and that the wheelchair does not tip over.

Seat inclination:

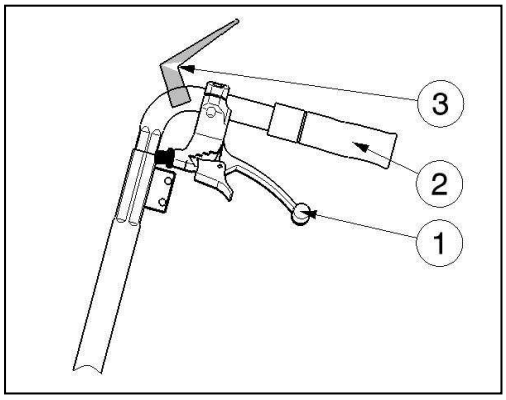

1. Pull lever ① on the left side (see label) towards the handgrip ② to adjust the seat inclination.

Label

2. Pull/Push the seat in the desired position (-5° to + 15°), the gas pressure spring shall be pressed in/out.
3. Loosen the lever ①, to block the gas pressure spring.

Backrest adjusting:

1. Pull lever ① on the right side (see label) towards the handgrip ② to adjust the angle of the backrest.

Label

2. Pull/Push the backrest in the desired position (-5°to + 50°), the gas pressure spring shall be pressed in/out.
3. Loosen the lever ①, to block the gas pressure spring.

If your wheelchair features drum brakes, the levers ① are used as brakes; additional levers ③ have been mounted for adjusting angle of backrest and seat inclination. These levers ③ can be triggered with the thumb.

2.11 Transfer in and out the wheelchair

⚠ **CAUTION: In case you cannot perform the transfer in a safe manner, ask someone to assist you.**

⚠ **CAUTION: Risk of tipping over the wheelchair – Do not stand on the footplates.**

1. Position the wheelchair as close as possible to the chair, couch or bed to/from you wish to transfer.
2. Check both brakes from the wheelchair are in the on position.
3. Fold the footplates upwards to prevent standing on them.
4. If the transfer is on the side of the wheelchair, you can remove the armrest and/or footrest on that side.
5. Transfer to/from the wheelchair.

2.12 Correct position in the wheelchair

Some recommendations for a comfortable use of the wheelchair:

- Position your backside as close as possible to the backrest.
- Make sure your upper legs are horizontal – If needed adjust the length of the footrests. (see § 3.8.2)

2.13 Riding the wheelchair

⚠ **WARNING: Risk of clamping – Prevent your fingers from being caught by the wheels spokes.**

⚠ **WARNING: Risk of clamping – Be careful passing through restricted passages (e.g. doors).**

⚠ **WARNING: Risk of burns – Be careful when driving in hot or cold environments (sunshine, extreme cold, saunas, etc.) for a sufficient amount of time and when touching - Surfaces can assume the environment temperatures.**

1. Release the brakes.
2. Take both handrims at their highest position.
3. Lean forward and push the handrims forward until straight arms.
4. Swing your arms loosely back to the handrims topside and repeat the movement.

2.14 Riding the wheelchair by an attendant

⚠ **WARNING: Risk of clamping – Be careful passing through restricted passages (e.g. doors).**

⚠ **WARNING: Risk of burns – Be careful when driving in hot or cold environments (sunshine, extreme cold, saunas, etc.) for a sufficient amount of time and when touching - Surfaces can assume the environment temperatures.**

The wheelchair can be pushed with the pushing handgrips or push bar by an attendant.

2.15 Moving on slopes

⚠ **WARNING: Control your speed – Moving on slopes as slow as possible.**

⚠ **WARNING: Consider the capacities of your attendant – If your attendant does not have enough force to control the wheelchair, put on the brakes.**

⚠ **WARNING: Risk of tipping over – Lean forward to move your centre of gravity forward. To improve a better stability.**

1. If available on the wheelchair, wear the safety belt.
2. Do not attempt moving on too high slopes. The maximum slope angles (upwards and downwards) are mentioned in table 1.
3. Ask an attendant to help you moving on the slope.
4. Lean forward to move your centre of gravity forward.

2.16 Negotiating steps or curbs

⚠ **WARNING: Risk of injury – Transporting a patient up or down steps is to be done with at least two attendants.**
⚠ **WARNING: Risk of injury – Wear suitable safety belt systems while being transported (information obtainable from your specialist dealer).**
⚠ **WARNING: Risk of injury – Sit quietly in your wheelchair and avoid jerky movements. If you cannot sit quietly when being transported because of illness or disability (e.g. slightly spastic, etc.), then at least two persons are required to secure the wheelchair on both sides by taking hold of fixed parts of the frame.**
⚠ **WARNING: Risk of injury – Make sure that your arms and legs do not protrude outside the wheelchair while being transported.**
⚠ **WARNING: Risk of injury or damages – No persons or objects should be below the wheelchair while being transported.**
⚠ **WARNING: Risk of injury – When the footrests have been removed, the legs of the patient are not secured.**

2.16.1 Getting down steps or curbs

Riding down steps or curbs can be done moving forwards with an attendant:

1. Make sure that the pushing handgrips are sufficiently tight.
2. Remove the footrests.
3. Ask the attendant to tip the wheelchair slightly backwards with the tip cap.
4. Get past the curbs while moving on the rear wheels and push the wheelchair forwards.
5. The second person secure the wheelchair in front by taking hold of the front of the frame after removing the footrests. He must walk backwards.
6. Put the wheelchair back on the four wheels after passing the curbs.

2.16.2 Moving up steps or curbs

Moving up steps or curbs can be done moving backwards with an attendant:

1. Make sure that the pushing handgrips are sufficiently tight.
2. Remove the footrests.
3. Turn the wheelchair to have the rear wheels facing the curb.
4. Lean backwards and move your centre of gravity above the rear wheels.
5. Ask the attendant to pull the wheelchair on the curb.
6. The second person secure the wheelchair in front by taking hold of the front of the frame after removing the footrests. He must walk forewards.
7. Take back the normal position in the wheelchair.

2.16.3 Taking of stairs

⚠ **WARNING: Risk of tipping over – Taking of stairs shall always be done with 2 attendants.**
⚠ **WARNING: Risk of injury – Lifting the wheelchair while the patient is seated in the wheelchair is forbidden! Always keep the rear wheels on the ground/stairs.**
⚠ **WARNING: Risk of injury – Wear suitable safety belt systems while being transported (information obtainable from your specialist dealer).**
⚠ **WARNING: Risk of injury or damages – No persons or objects should be below the wheelchair while being transported.**
⚠ **WARNING: Risk of injury – When the footrests have been removed, the legs of the patient are not secured.**

Taking the wheelchair of stairs shall be according following rules:

1. Remove the footrests.

2. One attendant tip the wheelchair slightly backwards.
3. The second attendant take the front of the frame.
4. Stay calm, avoid sudden movements and keep your arms inside the wheelchair.
5. Take the steps on the rear wheels of the wheelchair.
6. Mounting the footrests back after taking the stair.

2.16.4 Using ramps

⚠ **WARNING: Risk of injury – Do not exceed the maximum load of the ramps.**
⚠ **WARNING: Risk of injury - Choose the correct ramps so there cannot be caused any injury or damage. We do not accept any liability for injury or damage caused by an improper choice of ramps.**
⚠ **WARNING: Risk of injury - Be sure that the wheel height is high enough to get over the free height of the ramps. The wheelchair frame may not touch the ramps.**
⚠ **WARNING: Risk of injury - Use a restraining safety belt to secure yourself in your wheelchair.**
⚠ **WARNING: Risk of tipping over - Put the adjustment functions (seat, backrest, footrests, ...) that the wheelchair has the best stability.**

If you are considering the installation of ramps to overcome obstacles, kindly note the following:
Because of the large weight of the wheelchair we advise against using your own power for driving on a ramp, since it might not be possible for you to prevent the wheelchair from rolling backwards.

Never go up or down ramps without the aid of a helper.

2.17 Taking off the wheels

To facilitate the transport off the wheelchair the rear wheels can be taken off:

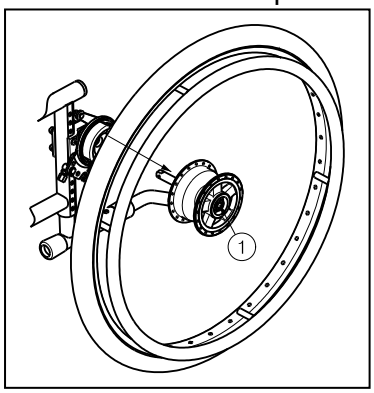

1. Make sure the brakes standing in the off position.
2. Take the wheelchair to the side frame where you want to remove the wheel.
3. Press the button ① in the center of the wheel hub.
4. Pull the wheel away from the frame.

2.18 Transport in the car

⚠ **DANGER: Risk of injury – The wheelchair is not suited for use as a seat in a motor vehicle.**
⚠ **WARNING: Risk of injury – See that the wheelchair is attached properly. So you can avoid injury from the passengers during collision or sudden braking.**
⚠ **WARNING: Risk of injury – Use for attaching the wheelchair and passenger NEVER the same seatbelt.**

Never use your wheelchair as a seat in an automobile or other vehicle. The wheelchair shall be marked with following symbol.

To transport the wheelchair in the car use following steps:

1. Set the seat in a horizontal position and the backrest vertically.
2. Remove footrests, armrests and accessories (ex. headrest, ...).
3. Store footrests, armrests and accessories safely.
4. If possible, fold the wheelchair and remove the wheels.
5. Place the wheelchair in the luggage place with 2 persons.
6. If the wheelchair and the passenger compartment is NOT separated, attach the frame of the wheelchair securely to the vehicle. You can use the available safety belts in the vehicle.
7. Place the patient in the recommended existing seats with their seatbelt systems.

3 Installation and adjustment

The instructions in this chapter are for the specialist dealer.

The Vermeiren multifunctional wheelchairs EZ1 has been designed entirely for your comfort. This wheelchair can be adjusted to individual requirements as explained below.

To find a service facility or specialist dealer near you, contact the nearest Vermeiren facility. A list of Vermeiren facilities can be found on the last page.

⚠ **WARNING: Risk of unsafe settings - Use only the settings described in this manual.**

⚠ **WARNING: Variation of allowed adjustments can still change the stability of your wheelchair (tilt back or sideways).**

3.1 Tools

To set up the wheelchair the following tools are needed.

- Wrench set n°10 to n°19
- Allen key set n°4 to n°5

3.2 Manner of delivery

The Vermeiren EZ1 shall be delivered with:

- 1 frame with armrests, rear and front wheels
- 1 pair footrests
- Anatomical seat (fixed)
- Anatomical backrest (fixed)
- Tools
- Manual
- Accessories

Check after receiving the goods, the completeness and functionality of the delivered product. Warranty claims are only valid if they are mentioned to the manufacturer within a period of two weeks in writing. For latent defects warranty claims apply only if they are mentioned to the manufacturer within a period of two weeks after discovery.

3.3 Mounting the frame

⚠ **WARNING: Risk of clamping – Check that no cables become squeezed or pinched.**

⚠ **WARNING: Risk of injury – Make sure that the safety pin Ⓐ is firmly closed.**

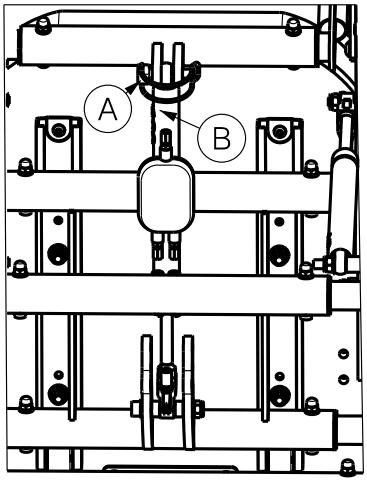

A = Safety pin
B = Gas spring

Mounting the frame after taking the wheelchair out of the original packaging:

1. Position the backrest in the 90° position.
2. Move the safety pin Ⓐ in the corresponding holes. One to fix the gas spring Ⓑ, which is located below the rear of the seat frame.

3.4 Adjusting the seat height

⚠ **WARNING: Risk of injury – Make sure that all screws are tightened securely. Check that the screws are not damaged.**

⚠ **WARNING: Risk of injury – Self-locking nuts may only be used once.**

⚠ **WARNING: Risk of injury – Avoid getting your fingers caught during the assembly process.**

⚠ **WARNING: Risk of tipping over – Make sure when adjusting the seat height, the seat frame will not be positioned with an inclination.**

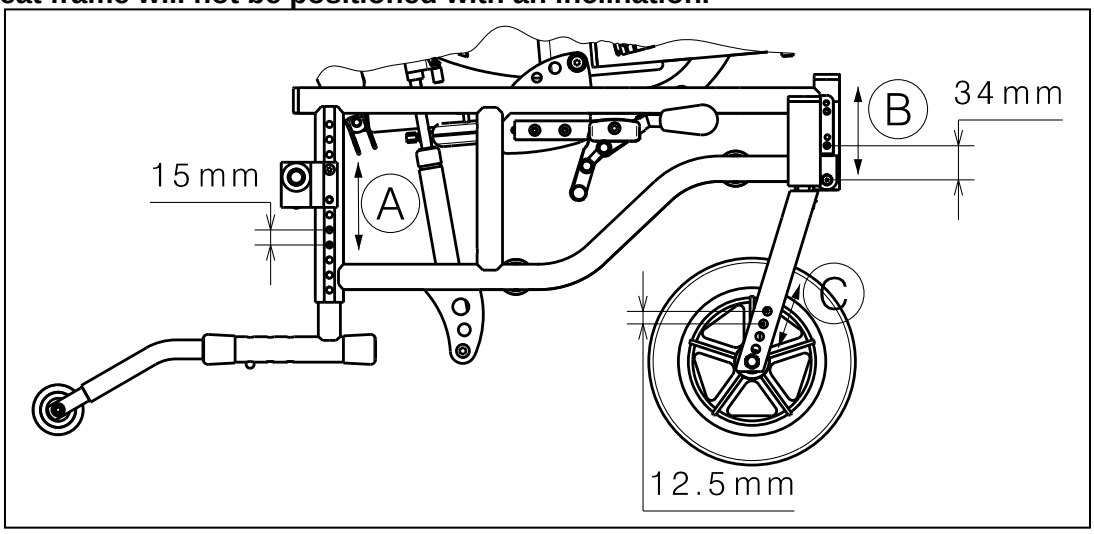

A **Axle block drive wheels**

1. Unscrew the two screws that mounted the axle block of the rear wheels to the frame.
2. Move the axle block to the desired height (steps 15 mm).
3. Retighten the two screws.
4. Adjust the brakes.

B **Steering wheel adapter**

1. Unscrew the two screws from the steering wheel adapter.
2. Place the steering wheel adapter in the desired position (2 positions: steps 34 mm).
3. Tighten the screws properly.

C **Front wheel fork**

1. Unscrew the screws of the front wheel axles from the front fork.
2. Place the steering wheel in the desired position of the steering fork (steps 12,5 mm)
3. Tighten the screws properly.

3.5 Adjusting the seat depth

⚠ **WARNING: Risk of injury – Make sure that all screws are tightened securely. Check that the screws are not damaged.**
⚠ **WARNING: Risk of injury – Self-locking nuts may only be used once.**
⚠ **WARNING: Risk of injury – Avoid getting your fingers caught during the assembly process.**

When the seat depth is adjusted in the limitations of the back frame and the gas pressure spring for the backrest adjustment is used, there can be created a gap between the backrest and seat cushions.

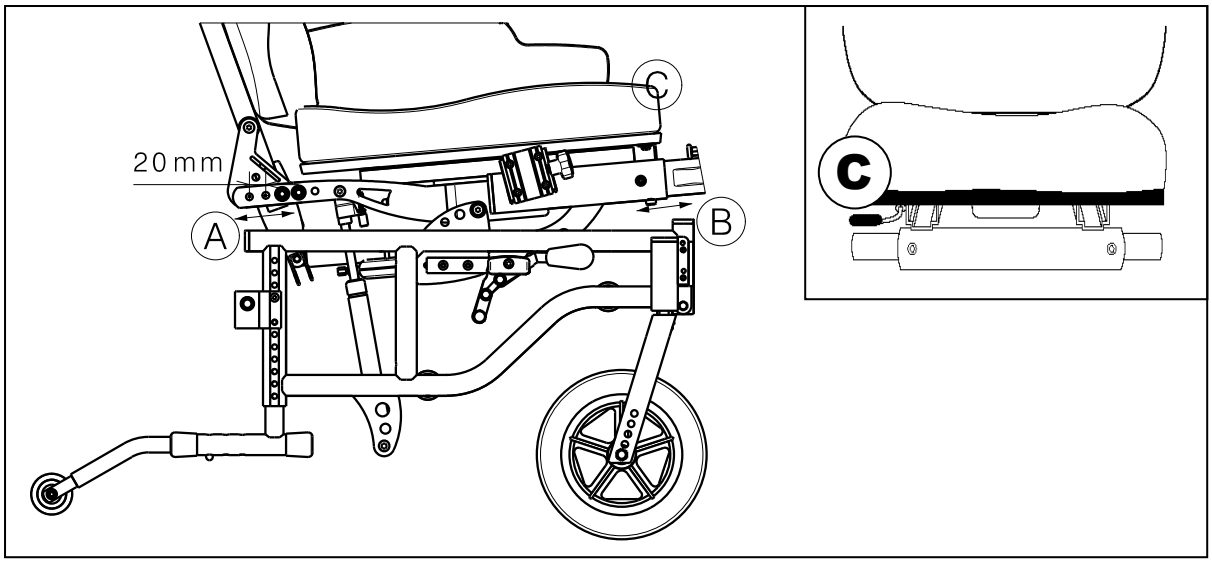

A

1. Loosen the screws on both sides, where the frame of the backrest is connected to the seat frame.
2. Pull the frame of the backrest in de desired position (4 positions: steps 20 mm)
3. Retighten the screws on both sides.
4. Adjust the brakes.

B

1. Loosen the screw where the footrest is secured in the seat frame.
2. Move the tube of the footrests in the desired position (stepless).
3. Retighten the screws properly.

C

1. Pull the lever for moving the seat frame upwards. These lever is located on the frontside just under the seat.
2. Move the seat to the desired position (stepless).
3. Release the lever again. The seat is locked in place.

3.6 Adjusting the anti-tipping

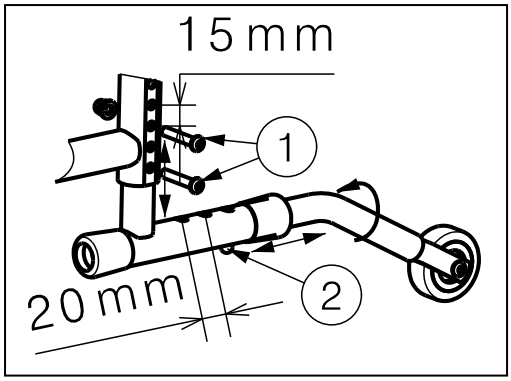

Make sure that the anti-tipping is adjusted to prevent tipping over of the wheelchair.

3.6.1 Height adjustment

1. Loosen the screws ①.
2. Move the anti-tipping in the desired position.
3. Retighten the screws ① properly.

3.6.2 Depth adjustment

1. Press the spring button ②.
2. Move the anti-tipping in the desired position (3 positions possible).
3. Loosen the spring button ①.
4. Check the spring button ① is securely fixated in the hole.

3.7 Adjust the brakes

⚠ **WARNING: Risk of injury – Brakes may only be adjusted by your specialist dealer.**

Adjust the brakes according following rules:

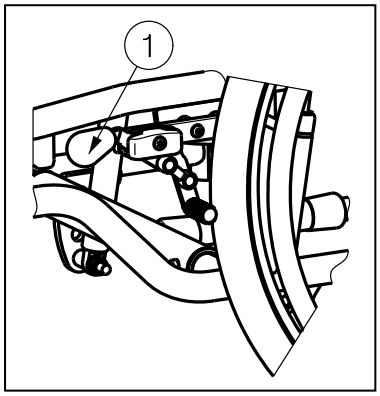

1. Install the wheels according § 2.2.
2. Disconnect the brakes by pulling lever ① backwards.

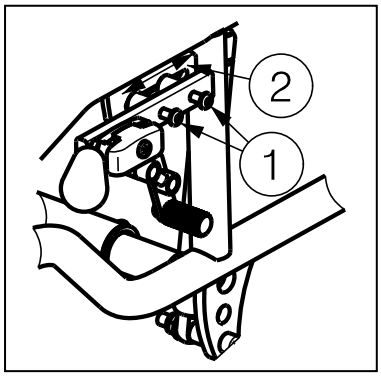

3. Loosen the bolts ① so the brake mechanism can slide over the guide ②.
4. Pull the brake mechanism over the guide ② to the desired position.
5. Retighten the bolts ①.
6. Check working of the brakes.
7. If necessary repeat the above steps until the brakes are adjusted well.

3.8 Adjusting of the footrests

3.8.1 Angle of the footrests

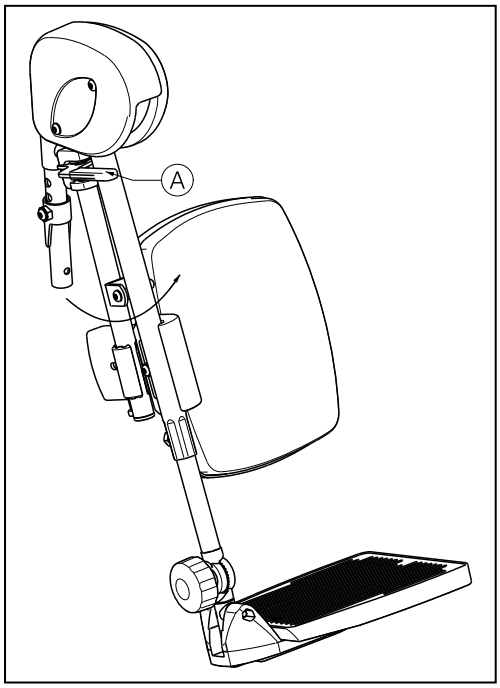

To lift the footrest up:

1. Raise the footrest.
2. Release the footrest, it automatically blocks to the desired angle (up to 113°).

To lower the footrest:

3. Pull the handle Ⓐ upwards.
4. Place the footrest in the desired position.
5. Release the handle Ⓐ.

3.8.2 Length of the footrests

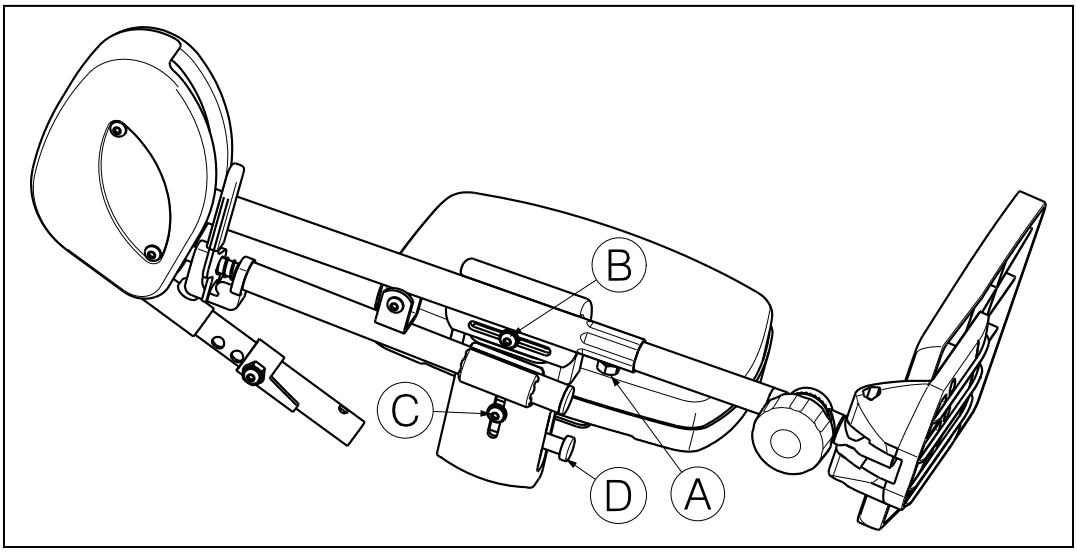

⚠ **CAUTION: Risk of injury – Check that all the adjustments for both footrest are placed in an identical position.**

⚠ **CAUTION: Risk of damage – Avoid that the footplates make any contact with the ground. Keep a minimum distance from 60 mm above the ground.**

Adjust the length of the footrests as follow:

1. Loosen the screw Ⓐ.
2. Adjust the length of the footrest to a comfortable length (range 140 mm: stepless).
3. Tighten the screw Ⓐ properly.

3.8.3 Height of the legrests

Adjust the height of the legrests as follow:

1. Loosen the screw Ⓑ.
2. Adjust the height of the legrest to a comfortable position (range 50 mm: stepless).
3. Tighten the screw Ⓑ properly.

3.8.4 Depth of the legrests

Adjust the depth of the legrests as follow:

1. Loosen the screw Ⓒ.
2. Adjust the depth of the legrest to a comfortable position (range 40 mm: stepless).
3. Tighten the screw Ⓒ properly.

3.8.5 Width of the legrests

Adjust the width of the legrests as follow:

1. Loosen the 2 screws at the rear of the legrest cushion.
2. Adjust the width of the legrest to a comfortable position.
3. Tighten the screws properly.

3.8.6 Folding up the legrests

1. Push on the button Ⓓ.
2. Fold up the legrest.
3. Release the button Ⓓ.

3.8.7 Angle of the footplate

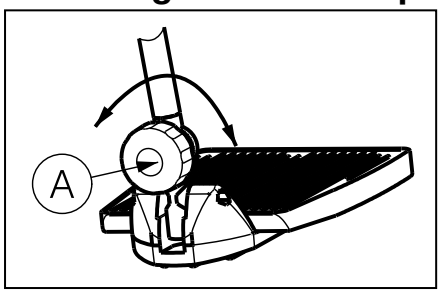

Adjust the angle of the footplate as follow:

1. Loosen the black star button Ⓐ.
2. Rotate the footplate to the desired angle.
3. Tighten the star button Ⓐ properly.

3.8.8 Depth of the footplate

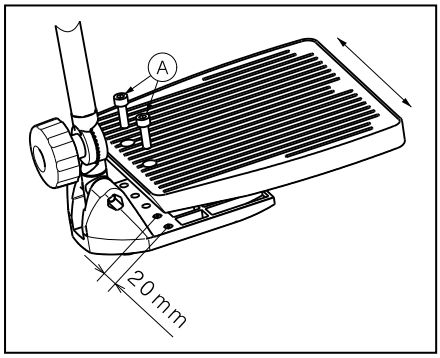

Adjust the depth of the footplate as follow:

1. Remove the two screws Ⓐ on the footplate.
2. Adjust the depth of the footplate to a comfortable position (three positions are possible).
3. Tighten the screws Ⓐ properly.

3.9 Adjusting of the armpads

⚠ **CAUTION: Risk of injury – Check that all the adjustments for both armpads are placed in an identical position.**

3.9.1 Height of the armpad

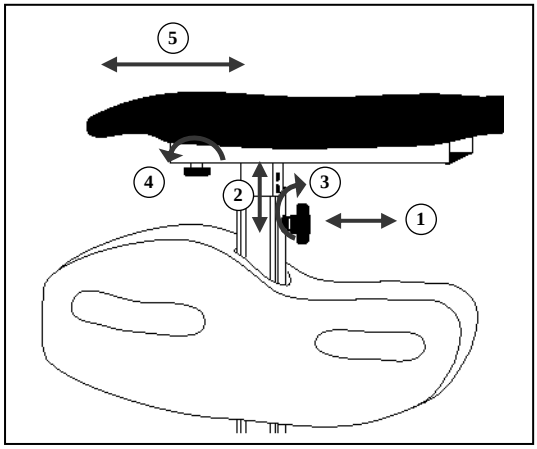

To adjust the height of the armpad:

1. Pull out the locking screw ①.
2. Pull or push the armpad into the required position ②.
3. Release the locking screw ①.
4. Turn the star button clockwise ③.
5. Check the armpad is securely fixated.

3.9.2 Depth of the armpad

To adjust the depth of the armpad:

1. Loosen the locking screw ④ just below the armpad.
2. Slide the armpad into the required position ⑤.
3. Retighten the locking screw ④ by hand.

3.10 Adjusting of the headrest

⚠ **WARNING: Risk of injury – Make sure that all screws are tightened securely.**

⚠ **WARNING: Risk of ergonomic injury – Make sure that the headrest is adjusted to the best comfort of the patient, and no pressure or tension is applied.**

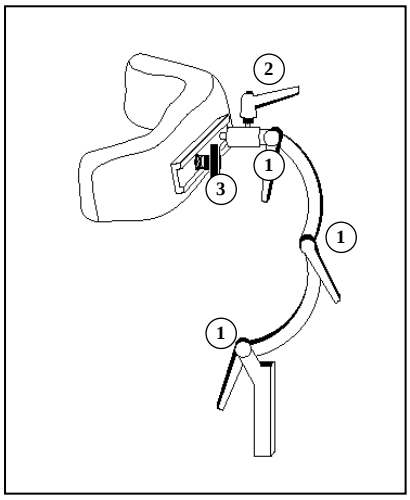

3.10.1 Height and depth of the headrest

To adjust the height and depth of the headrest:

1. Loosen the levers ①.
2. Adjust the headrest in the desired position.
3. Retighten the levers ① by hand.

3.10.2 Rotation upholstery

To upholstery of the headrest can rotate 360°.

1. Loosen the lever ②.
2. Turn the upholstery in the desired position.
3. Retighten the lever ② by hand.

3.10.3 Depth headrest cushion

The cushion of the headrest can be moved sideways:

1. Loosen the star button ③.
2. Move the headrest cushion in the desired position.
3. Retighten the star button ③ by hand.

4 Maintenance

For the maintenance manual of the wheelchairs refer to the Vermeiren website: www.vermeiren.be.

ITALIANO

GARANZIA CONTRATTUALE

La carrozzine manuali sono garantite 5 anni, la carrozzine ultra leggera 4 anni. Le carrozzine elettroniche, tricicli, letti e altri prodotti: 2 anno contro tutti i difetti di costruzione o di materiale (batterie 6 mesi). Multiposizioni 3 anni. Questa garanzia e' limitata alle sostituzione di parti riconosciute difettose.

CONDIZIONI

Per far valere la garanzia, e' necessario indirizzarla al vostro distributore di fiducia che presentera' al produttore il tagliando.

RISERVE

Questa garanzia non potra' essere applicata nei seguenti casi:

- danno dovuto al cattivo ed improprio utilizzo della carrozzina,
- danno subito durante il trasporto,
- incidente o caduta,
- smontaggio, modifica, o riparazione effettuate in proprio,
- usura abituale della carrozzina,
- invio del tagliando di garanzia con la data di acquisto.

VERMEIREN

WAARBORG
GARANTIE
WARRANTY
GARANTIE
GARANZIA

N.V. VERMEIREN N.V.
VERMEIRENPLEIN 1-15
B-2920 Kalmthout

Tel.: 00 32 (0)3 620 20 20
Fax: 00 32 (0)3 666 48 94
www.vermeiren.com

B

Naam/Nom/Name
Name/Nome _____

Adres/Adresse/Address
Adresse/Indrizzo _____

Woonplaats/Domicile/Home
Wohnort/Citta _____

E-mail _____

Artikel/Article/Article
Artikel/Articolo _____

Reeks nr./N° de série/Serie nr.
Serien-Nr./No. di serie _____

Aankoopdatum/Date d'achat/Date of purchase
Kaufdatum/Data di acquisto _____

Stempel verkoper/Timbre du vendeur
Dealer stamp/Händlerstempel
Timbro del rivenditore

A

Naam/Nom/Name
Name/Nome _____

Adres/Adresse/Address
Adresse/Indrizzo _____

Woonplaats/Domicile/Home
Wohnort/Citta _____

E-mail _____

Artikel/Article/Article
Artikel/Articolo _____

Reeks nr./N° de série/Serie nr.
Serien-Nr./No. di serie _____

Aankoopdatum/Date d'achat/Date of purchase
Kaufdatum/Data di acquisto _____

Stempel verkoper/Timbre du vendeur
Dealer stamp/Händlerstempel
Timbro del rivenditore

NEDERLANDS

CONTRACTUELE GARANTIE
Op de manuele rolstoelen geven wij 5 jaar, lichtgewicht rolstoelen 4 jaar. Op de elektronische rolstoelen, driewielers, bedden en andere producten : 2 jaar waarborg op constructie - of materiaalfouten (batterijen 6 maanden). Op multipositie rolstoelen geven we 3 jaar waarborg. Deze garantie is uitdrukkelijk beperkt tot de vervanging van defecte stukken of onderdelen.

TOEPASSINGSVOORWAARDEN
Om aanspraak te kunnen maken op de waarbord, bezorgt u het garantiecertificaat dat u heeft bewaard, aan uw Vermeiren dealer. De waarborg is enkel geldig in de zetel van de onderneming.

UITZONDERINGEN
Deze garantie is niet van toepassing in geval van:

- schade te wijten aan het verkeerd gebruik van de rolstoel,
- beschadiging tijdens het transport,
- een val of een ongeval
- een demontage, wijziging of herstelling uitgevoerd buiten onze firma,
- normale slijtage van de rolstoel,
- niet inzenden van de garantiestrook.

FRANCAIS

GARANTIE CONTRACTUELLE
Les fauteuils manuels standard sont garantis 5 ans, les fauteuils ultra légers 4 ans. Les fauteuils électroniques, tricycles, lits et d'autres produits: 2 ans contre tous vices de construction ou de matériaux (batteries 6 mois). Fauteuils multiposition 3 ans. Cette garantie est expressément limitée au remplacement des éléments ou pièces détachées reconnues défectueuses.

CONDITIONS D'APPLICATION
Pour prétendre à cette garantie, il faut présenter le certificat de garantie que vous avez conservé à votre distributeur Vermeiren. La garantie est uniquement valable au siège de la société.

RESERVES
Cette garantie ne pourra être appliquée en cas de:

- dommage dû à la mauvaise utilisation du fauteuil,
- endommagement pendant le transport,
- accident ou chute,
- démontage, modification ou réparation fait en dehors de notre société,
- usure normale du fauteuil,
- non retour du coupon de garantie.

ENGLISH

CONTRACTUAL WARRANTY
We offer 5 years of warranty on standard wheelchairs, lightweight wheelchairs 4 years. Electronic wheelchairs, tricycles, beds and other products: 2 years (batteries 6 months) and multiposition wheelchairs 3 years. This warranty is limited to the replacement of defective or spare parts.

APPLICATION CONDITIONS
In order to claim tis warranty, part "B" of this card has to be given to your official Vermerien dealer. The warranty is only valid when parts are replaced by Vermeiren in Belgium.

EXCEPTIONS
This warranty is not valid in case of:

- damage due to incorrect usage of the wheelchair,
- damage during transport,
- involvement in an accident,
- a dismount, modification or repair carried outside of our company and/or official Vermeiren dealership,
- normal wear of the wheelchair,
- non-return of the warranty card

DEUTSCH

GARANTIEERKLÄRUNG
Wir garantieren, dass für unsere Rollstühle hochwertige Produkte verwendet werden, die in sorgfältiger Verarbeitung nach dem neuesten Stand der Technik montiert werden.
Bevor Ihr Rollstuhl unser Werk verlassen hat, wurde er einer eingehenden Endkontrolle unterzogen, um auch letzte, eventuell vorhandene Mängel aufzuspüren.

Auf Standardrollstühle gewähren wir eine Garantie von 5 Jahren, auf Leichtgewichtrollstühle 4 Jahre, auf elektronische Rollstühle, Dreiräder, Betten und andere Produkte: 2 Jahre (Batterien 6 Monate), auf Multifunktionsrollstühle 3 Jahre.
In dieser Garantie eingeschlossen sind alle Mängel, die auf einen Produkt- oder Verarbeitungsfehler zurückzuführen sind, Dieser Garantie unterliegen keine Schäden aus unsachgemäßer Benutzung. Ebenfalls sind Verschleißteile von der Garantie ausgenommen.

Sollte einmal der Fall eingetreten sein, dass Sie aus berechtigtem Grunde mit Ihrem Rollstuhl unzufrieden sind, so wenden Sie sich bitte unverzüglich an Ihren Fachhändler. Er wird sich in enger Zusammenarbeit mit uns darum bemühen, eine für Sie zufriedenstellende Lösung zu finden.

N.V. VERMEIREN N.V.
Vermeirenplein 1/15
B-2920 Kalmthout
BELGIUM

A

- terugsturen binnen de 8 dagen na aankoop of registreer uw product via onze website, **http://www.vermeiren.be/registration**
- à renvoyer dans les 8 jours après achat ou régistrer votre produit sur notre site, **http://www.vermeiren.be/registration**
- please return within 8 days of date of purchase or register your product at our website, **http://www.vermeiren.be/registration**
- zurückschicken innerhalb von 8 Tagen nach kauf oder registrieren Sie Ihr Produkt auf unserer website, **http://www.vermeiren.be/registration**
- da restituire entro 8 giorni dalla data di acquisto o registri il vostro prodotto al nostro web site, **http://www.vermeiren.be/registration**

B

- in geval van herstelling, kaart "B" bijvoegen.
- en cas de réparation, veuillez ajouter la carete "B".
- in case of repair, please add part "B".
- im Falle einer Reparatur, Karte "B" beifügen
- in case di riparazione, rispediteci la carta "B".

SERVICE

The manual wheelchair was serviced:

Dealer´s stamp: Date:	Dealer´s stamp: Date:
Dealer´s stamp: Date:	Dealer´s stamp: Date:
Dealer´s stamp: Date:	Dealer´s stamp: Date:
Dealer´s stamp: Date:	Dealer´s stamp: Date:
Dealer´s stamp: Date:	Dealer´s stamp: Date:

- For service checklists an additional technical information, please see our specialist dealers nearest to you. More information on our website at: www.vermeiren.com.

Notes

Belgium

N.V. Vermeiren N.V.

Vermeirenplein 1 / 15
B-2920 Kalmthout
Tel: +32(0)3 620 20 20
Fax: +32(0)3 666 48 94
website: www.vermeiren.be
e-mail: info@vermeiren.be

Germany

Vermeiren Deutschland GmbH

Wahlerstraße 12 a
D-40472 Düsseldorf
Tel: +49(0)211 94 27 90
Fax: +49(0)211 65 36 00
website: www.vermeiren.de
e-mail: info@vermeiren.de

France

Vermeiren France S.A.

Z. I., 5, Rue d´Ennevelin
F-59710 Avelin
Tel: +33(0)3 28 55 07 98
Fax: +33(0)3 20 90 28 89
website: www.vermeiren.fr
e-mail: info@vermeiren.fr

Austria

L. Vermeiren Ges. mbH

Winetzhammerstraße 10
A-4030 Linz
Tel: +43(0)732 37 13 66
Fax: +43(0)732 37 13 69
website: www.vermeiren.at
e-mail: info@vermeiren.at

Italy

Reatime S.R.L.

Viale delle Industrie 5
I-20020 Arese MI
Tel: +39 02 99 77 07
Fax: +39 02 93 58 56 17
website: www.reatime.it
e-mail: info@reatime.it

Switzerland

Vermeiren Suisse S.A.

Hühnerhubelstraße 59
CH-3123 Belp
Tel: +41(0)31 818 40 95
Fax: +41(0)31 818 40 98
website: www.vermeiren.ch
e-mail: info@vermeiren.ch

Poland

Vermeiren Polska Sp. z o.o

ul. Łączna 1
PL-55-100 Trzebnica
Tel: +48(0)71 387 42 00
Fax: +48(0)71 387 05 74
website: www.vermeiren.pl
e-mail: info@vermeiren.pl

The Netherlands

Vermeiren Nederland B.V.

Domstraat 50
NL-3864 PR Nijkerkerveen
Tel: +31(0)33 2536424
Fax: +31(0)33 2536517
website: www.vermeiren.com
e-mail: info@vermeiren.be

Spain

Vermeiren Iberica, S.L.

Trens Petits, 6. - Pol. Ind. Mas Xirgu.
17005 Girona
Tel: +34 902 48 72 72
Fax: +34 972 40 50 54
website: www.vermeiren.es
e-mail: info@vermeiren.es

Czech Republic

Vermeiren ČR S.R.O.

Sezemická 2757/2 - VGP Park
193 00 Praha 9 - Horní Počernice
Tel: +420 731 653 639
Fax: +420 596 121 976
website: www.vermeiren.cz
e-mail: info@vermeiren.cz

R.E.: N.V. Vermeiren N.V., Vermeirenplein 1/15 - 2920 Kalmthout - Belgium – 2012-12- Instruction Manual EZ1- vD